CS 168 Fall 2026

Introduction to the Internet Midterm

Print Your Name: _____

Print Your Student ID: _____

You have 110 minutes. There are 7 questions of varying credit. (100 points total)

Question:	1	2	3	4	5	6	7	Total
Points:	11	10	14	16	21	18	10	100

For questions with **circular bubbles**, you may select only one choice.

- ○ Unselected option (Completely unfilled)
- ◌ Don't do this (it will be graded as incorrect)
- ● Only one selected option (completely filled)

For questions with **square checkboxes**, you may select one or more choices.

- ■ You can select
- ■ multiple squares
- ☑ Don't do this (it will be graded as incorrect)

Anything you write outside the answer boxes or you ~~cross out~~ will not be graded. If you write multiple answers, your answer is ambiguous, or the bubble/checkbox is not entirely filled in, we will grade the worst interpretation.

Honor Code: Read the honor code below and sign your name.

I understand that I may not collaborate with anyone else on this exam, or cheat in any way. I am aware of the Berkeley Campus Code of Student Conduct and acknowledge that academic misconduct will be reported to the Center for Student Conduct and may further result in, at minimum, negative points on the exam.

Sign your name: _____

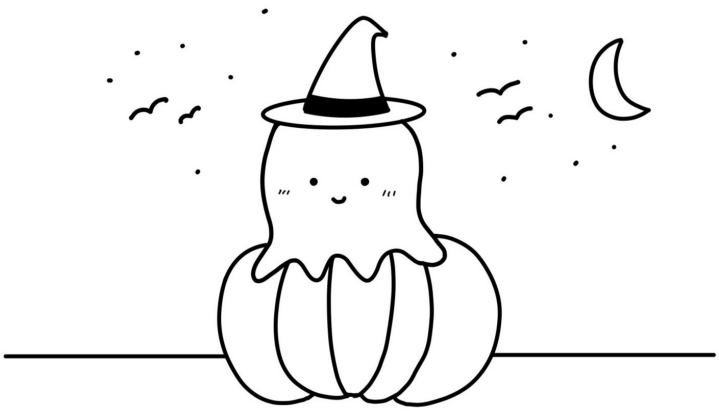

Doodle credit: Valerie Eng

Q1 *Potpourri* **(11 points)**

Q1.1 (2 points) In Project 1 (Traceroute), which of these best describes the result of using an unreachable destination port in each probe?

- ◯ The destination sends an ICMP Port Unreachable message.
- ◯ The destination sends an ICMP Time Exceeded message.
- ◯ Intermediate routers each send an ICMP Port Unreachable message.
- ◯ Replies to the probes are sent to an unreachable port that is only used for traceroute.

Q1.2 (2 points) In Project 2 (Routing), which of these best describes the result of setting the expiry time of poisoned routes to `api.current_time() + self.ROUTE_TTL`, instead of deleting the routes right away?

- ◯ The router periodically advertises poison for expired routes.
- ◯ The router continues forwarding packets along the expired route until a new route is found.
- ◯ The router's neighbors forward packets along the expired route until a new route is found.
- ◯ The router forwards the poison to all neighbors except the next-hop router.

Q1.3 (3 points) CS 168 owns the IPv4 address range `10.168.0.0/16`, and wants to allocate a block of 400 IP addresses in this range, starting at `10.168.0.0`.

What is the smallest IP prefix that fits this block? Write your answer in the form `a.b.c.d/n`.

Q1.4 (2 points) Select all true statements about router hardware.

- ☐ The data plane computes routes and installs forwarding table entries.
- ☐ The fabric allows data to travel between linecards.
- ☐ The data plane is used every time a user packet arrives.
- ☐ Operators typically interact with routers using the control plane.
- ◯ None of the above

Q1.5 (2 points) In BGP, why does an AS reject a route advertisement if its own AS number already appears in the advertisement's ASPATH?

- ◯ To prevent routing loops.
- ◯ To prevent multiple routes to the same destination.
- ◯ To select the lowest-cost route.
- ◯ To select the route with the fewest AS hops.

Q2 *Are The Links Green?* **(10 points)**

Consider the topology below. Assumptions:

- A router must receive all bits of a payload before sending that payload along the next link.
- Queue sizes are infinite, and queues are processed in FIFO order.
- A packet is considered to "arrive" at a router/host when the last byte of the packet is received by that router/host.

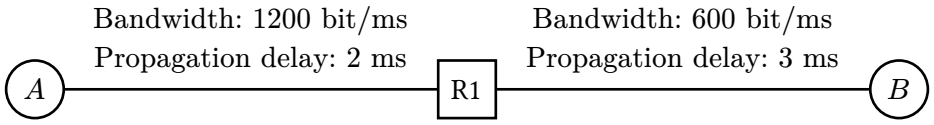

Host A sends a packet to host B using UDP-over-IPv4. The packet consists of:

- An application payload of size 800 bits.
- A UDP header of size 100 bits.
- An IPv4 header of size 150 bits.
- A link-layer header of size 150 bits.

Q2.1 (1 point) What is the total size of the packet, including all headers?

	bits

Q2.2 (2 points) Based on lecture (i.e. no router optimizations or extra features), which parts of the packet does R1 modify? Select all that apply.

☐ Application payload ☐ IPv4 header ◯ None of these

☐ UDP header ☐ Link-layer header

Q2.3 (4 points) A transmits the first bit of the packet at $t = 0$. What time does the packet arrive at B?

$t =$	ms

Q2.4 (3 points) This subpart is independent of the previous subparts.

A transmits two packets to B, one after the other. Each packet is 600 bits (including all headers).

A transmits the first bit of the first packet at $t = 0$. What time does the **second** packet arrive at B?

◯ 4 ms ◯ 7 ms ◯ 8 ms ◯ 10 ms

◯ 6.5 ms ◯ 7.5 ms ◯ 9 ms ◯ 16 ms

Q3 *Distance-Vector* **(14 points)**

Consider running the distance-vector algorithm from lecture on this topology. All links cost 1.

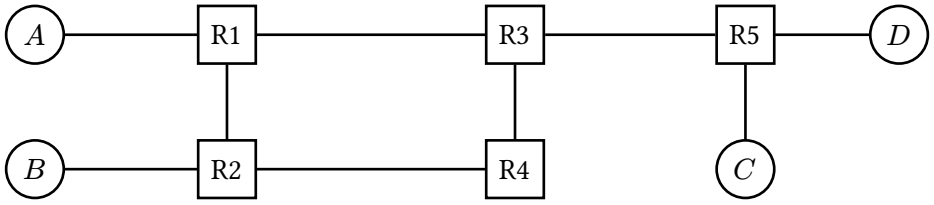

Assumptions:

- At $t = 0$, all forwarding tables are empty.
- At $t = 1$, static routes are installed.
- At every time step starting at $t = 2$, each router (1) removes expired routes, then (2) processes advertisements and updates its table, then (3) sends out advertisements.
- Transmission delay is negligible, i.e. an advertisement sent out at $t = 2$ can be processed at $t = 3$.
- When two routes have the same cost, tiebreak by preferring the router with lower number.
- Routing table entries expire after 5 time steps of receiving no advertisements.
- Unless otherwise specified, split horizon, poison reverse, and route poisoning are disabled.
- All costs 16 or greater are considered infinite.

Q3.1 (2 points) What is the first time step where, after processing advertisements at that time step, R2 has an entry for every destination?

○ $t = 1$ ○ $t = 2$ ○ $t = 3$ ○ $t = 4$ ○ $t = 5$ ○ $t = 6$

Q3.2 (4 points) Fill in R3's forwarding table immediately after processing advertisements at $t = 3$.

If no route has been learned for a destination, write "None" in both columns.

R3's Forwarding Table		
Destination	**Next Hop**	**Cost**
A		
B		
C		
D		

The diagram, reprinted for your convenience:

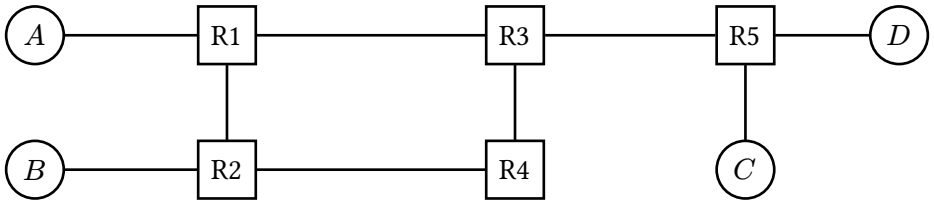

Q3.3–Q3.5 are independent, i.e. each subpart starts from the original network.

Q3.3 (3 points) The network converges. Then the R3–R5 link goes down.

Which router(s) eventually have a cost-16 entry for D? Select all that apply.

☐ R1 ☐ R2 ☐ R3 ☐ R4 ☐ R5 ○ None

Q3.4 (2 points) In this subpart only, R3 uses poison reverse and every other router uses split horizon.

The network converges. Then the R3–R5 link goes down.

True or false: At some later time step t, packets destined for D are forwarded in a loop.

○ True ○ False

Q3.5 (3 points) In this subpart only, you may choose to enable poison reverse on exactly one router. All other routers use split horizon.

The network converges. Then the R3–R5 link goes down.

Which router should have poison reverse enabled, so that the network does not suffer from the count-to-infinity problem?

○ R1 ○ R2 ○ R3 ○ R4 ○ R5

○ None; the count-to-infinity problem occurs no matter which router you choose.

Q4 *Link-State + IP Addressing* **(16 points)**

Consider the topology below, with five ASes:

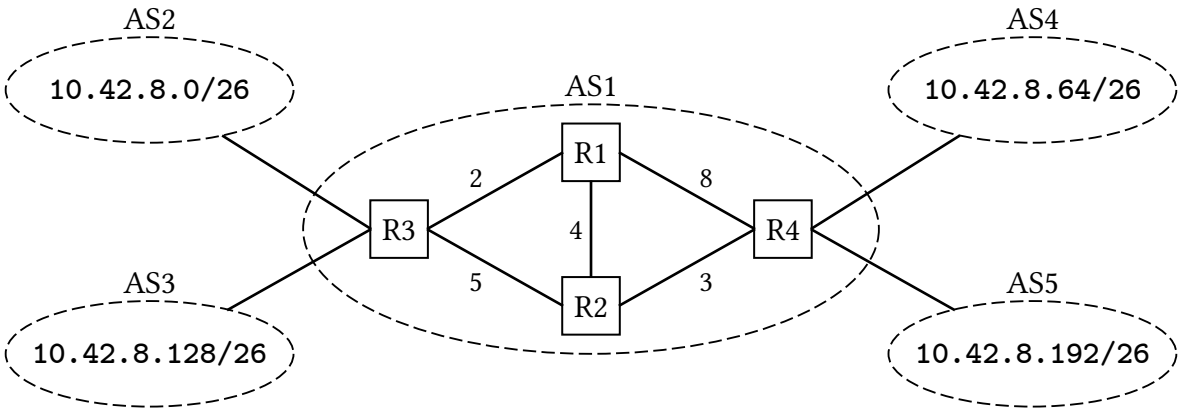

AS1 runs link-state as its intra-domain routing protocol.

Q4.1 (2 points) At convergence, what is the path cost for the following source-destination pairs? Write one number in each box.

R1 to R3: ____ R1 to R4: ____

R2 to R3: ____ R2 to R4: ____

Q4.2 (2 points) For this subpart only, the R1–R4 link has cost 7. All other costs are unchanged.

The routers run link-state routing, tiebreaking by preferring the lower-numbered next-hop router.

After convergence, which next-hop does R1 use to forward packets toward R4?

- ○ R2
- ○ R4
- ○ R3
- ○ No valid route exists.

The diagram, reprinted for your convenience:

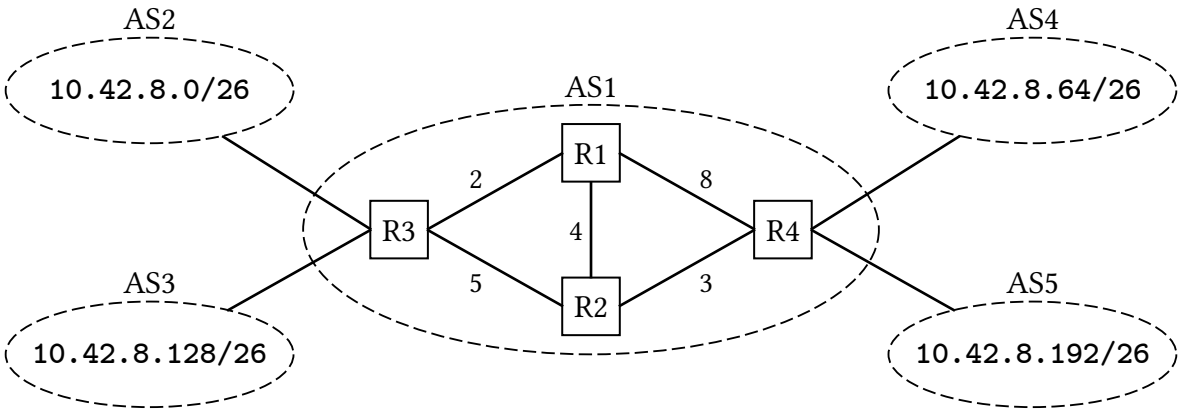

AS1's border routers run eBGP to learn about routes to AS2, AS3, AS4, and AS5.

Then, AS1 uses iBGP to advertise routes to AS2, AS3, AS4, and AS5 to the internal routers.

Because of a bug in iBGP, not all routers have the same information about egress routers:

R1's iBGP Table	
Destination	**Egress Router**
`10.42.8.0/24`	R3

R2's iBGP Table	
Destination	**Egress Router**
`10.42.8.0/24`	R4

R3 and R4's iBGP Table	
Destination	**Egress Router**
`10.42.8.0/26`	R3
`10.42.8.64/26`	R4
`10.42.8.128/26`	R3
`10.42.8.192/26`	R4

In Q4.3–Q4.4, select the first four routers visited by each packet. Do **not** include the starting router.

Choose one option in each row. If the packet leaves AS1, choose "Exited" for all remaining rows.

Q4.3 (4 points) A packet starts at R1 with destination `10.42.8.70`. After R1, the next routers are:

First hop:	○ R1	○ R2	○ R3	○ R4	○ Exited
Second hop:	○ R1	○ R2	○ R3	○ R4	○ Exited
Third hop:	○ R1	○ R2	○ R3	○ R4	○ Exited
Fourth hop:	○ R1	○ R2	○ R3	○ R4	○ Exited

Q4.4 (4 points) A packet starts at R2 with destination `10.42.8.150`. After R2, the next routers are:

First hop:	○ R1	○ R2	○ R3	○ R4	○ Exited
Second hop:	○ R1	○ R2	○ R3	○ R4	○ Exited
Third hop:	○ R1	○ R2	○ R3	○ R4	○ Exited
Fourth hop:	○ R1	○ R2	○ R3	○ R4	○ Exited

Diagram and tables, reprinted for your convenience:

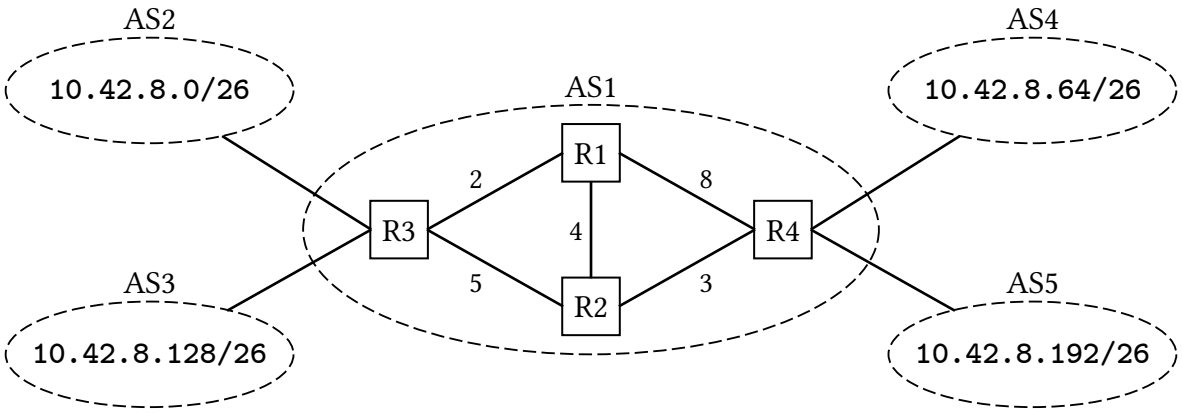

R1's iBGP Table	
Destination	**Egress Router**
10.42.8.0/24	R3

R2's iBGP Table	
Destination	**Egress Router**
10.42.8.0/24	R4

R3 and R4's iBGP Table	
Destination	**Egress Router**
10.42.8.0/26	R3
10.42.8.64/26	R4
10.42.8.128/26	R3
10.42.8.192/26	R4

In Q4.5–Q4.6, a new link with positive integer cost k is added between R3 and R4.

All routers in AS1 learn about the new link through link-state routing and recompute their shortest paths. The iBGP tables remain unchanged from above.

Assume all routers tiebreak by preferring the lower-numbered next-hop router.

Q4.5 (2 points) Our goal is to allow any packet, originating at any router in AS1, to be delivered to any other AS.

What are all values of k that achieve this goal? Write an integer in the box.

$k \leq$

Q4.6 (2 points) Our goal is to allow any packet, originating at any router in AS1, to be delivered to any other AS. Also, we want every packet to follow a least-cost path to an egress router within AS1.

What are all values of k that achieve these goals? Write an integer in the box.

$k \leq$

Q5 *Routers: Trick or Trie!* **(21 points)**

Consider a router, as introduced in class.

Q5.1 (1 point) Which of these planes operates on the slowest time scale?

◯ Management ◯ Data ◯ Control

Q5.2 (2 points) Which of these router components does punt traffic pass through? Select all that apply.

☐ Forwarding Chip ☐ Fabric ☐ Fabric Chips

☐ Control Processor ☐ Physical Ports ◯ None of the above

Q5.3 (2 points) Which of these address ranges are fully contained within the range `169.229.0.0/16`? Select all that apply.

☐ `169.229.129.0/24` ☐ `169.0.0.0/8` ☐ `169.245.154.0/24`

☐ `169.229.226.23/32` ☐ `169.229.0.0/32` ◯ None of the above

Q5.4 (3 points) Fill in the new table with three prefixes, such that all routing decisions stay the same as the original table.

Original Table:

Destination	Port Number
`128.32.128.0/24`	1
`128.32.129.0/24`	1
`128.32.16.0/24`	2
`128.32.17.0/24`	2
`128.32.40.1/32`	3

→

New Table:

Destination	Port Number
	1
	2
	3

In Q5.5–Q5.8, consider using a binary trie to represent the following forwarding table:

Fixed Bits	Port Number
0110 0010	3
0010 0101	2
0110 1110	5

Q5.5 (2 points) How many total nodes does the resulting binary trie have?

Q5.6 (1 point) What is the depth of the resulting binary trie? (A trie with only a root node has depth 0.)

○ 1 ○ 2 ○ 4 ○ 6 ○ 8 ○ 16 ○ 24 ○ 32

One trick to reduce depth is to use a *multi-bit trie*, which uses each edge to examine multiple bits at once.

The *stride* is the number of bits checked on each edge of the trie. For example, in a standard trie from lecture, the stride is 1.

Q5.7 (2 points) If we use a stride-4 trie for the above table, how many nodes are in the resulting trie?

Q5.8 (1 point) If we use a stride-4 trie for the above table, what is the depth of the resulting trie?

○ 1 ○ 2 ○ 4 ○ 6 ○ 8 ○ 16 ○ 24 ○ 32

In Q5.9–Q5.11, consider a trie for an arbitrary IPv4 forwarding table (not necessarily the table above).

Q5.9 (2 points) What is the maximum depth of a trie with stride 1?

Q5.10 (2 points) What is the maximum depth of a trie with stride 8?

○ 1 ○ 2 ○ 4 ○ 6 ○ 8 ○ 16 ○ 24 ○ 32

Q5.11 (3 points) Suppose we take an arbitrary forwarding table and build two tries: one with stride 1, and one with a larger stride. Select all true statements about the resulting two tries.

☐ The trie with larger stride could require traversing more edges.

☐ The trie with larger stride could have more nodes.

☐ In the trie with larger stride, updating a route could require updating more nodes.

○ None of the above

Q6 *BGP and Alliances* **(18 points)**

In Q6.1–Q6.4, consider the AS graph below:

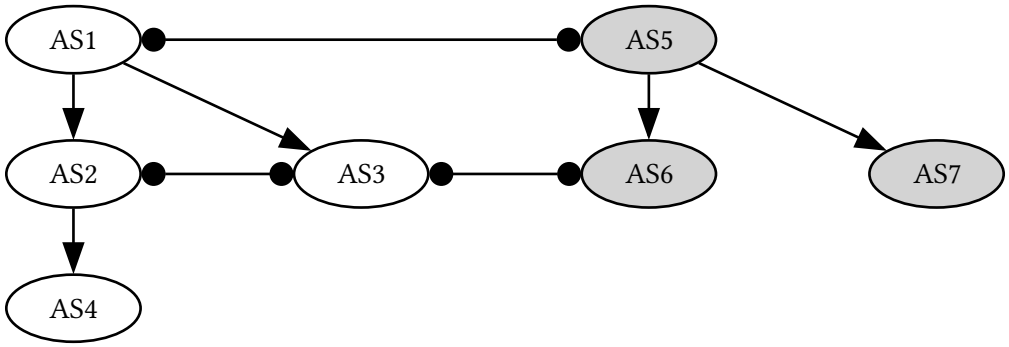

All ASes follow Gao-Rexford import and export policies, except:
- There are two *alliances*: {AS1, AS2, AS3, AS4} are in one alliance, and {AS5, AS6, AS7} are in another.
- An AS does not export any routes to ASes in the other alliance (unless otherwise specified).

Q6.1 (2 points) AS3 sends a packet to AS4. Which of these paths does the packet take?

- ○ AS3—AS2—AS4
- ○ AS3—AS6—AS5—AS1—AS2—AS4
- ○ AS3—AS1—AS2—AS4
- ○ There is no route from AS3 to AS4.

Q6.2 (2 points) AS6 sends a packet to AS4. Which of these paths does the packet take?

- ○ AS6—AS3—AS2—AS4
- ○ AS6—AS3—AS1—AS2—AS4
- ○ AS6—AS5—AS1—AS2—AS4
- ○ There is no route from AS6 to AS4.

In Q6.3–Q6.4, consider the same graph as above, but AS1 modifies its export rule:
Routes from AS1's customers will be exported to AS5.

Q6.3 (2 points) AS6 sends a packet to AS4. With the modified rule, which path does the packet take?

- ○ AS6—AS3—AS2—AS4
- ○ AS6—AS3—AS1—AS2—AS4
- ○ AS6—AS5—AS1—AS2—AS4
- ○ There is no route from AS6 to AS4.

Q6.4 (2 points) AS4 sends a packet to AS7. With the modified rule, which path does the packet take?

- ○ AS4—AS2—AS1—AS5—AS7
- ○ AS4—AS2—AS1—AS3—AS6—AS5—AS7
- ○ AS4—AS2—AS3—AS6—AS5—AS7
- ○ There is no route from AS4 to AS7.

In Q6.5–Q6.7, consider some arbitrary AS graphs (not necessarily the graph on the previous page).
- Every AS belongs to either the *red* alliance or the *blue* alliance.
- As before, an AS does not export any routes to ASes in the other alliance (unless otherwise specified).

Note: A "valid" AS graph is a graph with no cycles and a hierarchy with Tier 1 AS(es) on top.

Q6.5 (2 points) We take a valid AS graph, and randomly assign every AS to be either red or blue. Select all true statements about the resulting graph.

☐ A red AS can send packets to any blue AS. ☐ A blue AS can send packets to any blue AS.

☐ A blue AS can send packets to any red AS. ☐ A red AS can send packets to any red AS.

◯ None of the above

Q6.6 (4 points) Consider two valid AS graphs: one with all red ASes, and one with all blue ASes.

Each graph only has a single Tier 1 AS. We add a peer link between the Tier 1 ASes.

Then, we modify the blue Tier 1 AS's export rules:
- Routes from the blue Tier 1 AS's customers will be exported to the red Tier 1 AS.

Select all true statements about the resulting graph.

☐ A red AS can send packets to any blue AS. ☐ A blue AS can send packets to any blue AS.

☐ A blue AS can send packets to any red AS. ☐ A red AS can send packets to any red AS.

◯ None of the above

Q6.7 (4 points) Consider two valid AS graphs: one with all red ASes, and one with all blue ASes.

Each graph has multiple Tier 1 ASes. We add a single peer link between one red Tier 1 AS and one blue Tier 1 AS.

Then, we modify the export rules of only these two Tier 1 ASes:
- Routes from the red AS's customers will be exported to the blue AS.
- Routes from the blue AS's customers will be exported to the red AS.

Select all true statements about the resulting graph.

☐ A red AS can send packets to any blue AS. ☐ A blue AS can send packets to any blue AS.

☐ A blue AS can send packets to any red AS. ☐ A red AS can send packets to any red AS.

◯ None of the above

Q7 *TCP Reliability* **(10 points)**

In Q7.1–Q7.3, consider the TCP design from lecture.

Q7.1 (2 points) Which of these best describes the reliability guarantee of TCP?

- ◯ The receiver sees each byte exactly once.
- ◯ The receiver provides the sent bytes in-order to the application.
- ◯ The receiver sees every byte sent, even if the network goes down.
- ◯ The receiver sees TCP segments in the order they were sent.

Q7.2 (2 points) Which of these best describes why TCP uses sequence numbers?

- ◯ To detect payload corruption.
- ◯ To detect duplicates and reorder data.
- ◯ To act as a retransmission timer.
- ◯ To avoid packets traveling in a loop.

Q7.3 (2 points) A packet is transmitted, but the ACK is lost. Which of these best describes what happens?

- ◯ The receiver times out and resends ACK.
- ◯ The entire TCP connection fails.
- ◯ The sender retransmits the packet.
- ◯ The receiver sends a negative ACK.

In Q7.4–Q7.7, Alice sends data to Bob. Each segment contains 4 bytes of data.

Alice sends the following three segments, in order:

Segment	Sequence number	Result
S1	100	Received by Bob
S2	104	Lost in the network
S3	108	Received by Bob

Each subpart continues from the previous subparts.

Q7.4 (1 point) Bob receives S1. Which ACK number should he send?

- ◯ ACK = 100
- ◯ ACK = 104
- ◯ ACK = 108
- ◯ ACK = 112

Q7.5 (1 point) Bob receives S3. Which ACK number should he send?

- ◯ ACK = 104
- ◯ ACK = 107
- ◯ ACK = 108
- ◯ ACK = 112

Q7.6 (1 point) After Bob receives S1 and S3, which bytes can be delivered to the application?

- ◯ Bytes 100–111
- ◯ Bytes 100–103 and 108–111
- ◯ Bytes 100–103
- ◯ Bytes 108–111

Q7.7 (1 point) Alice retransmits S2, and Bob receives S2. Which ACK number should he send?

- ◯ ACK = 104
- ◯ ACK = 108
- ◯ ACK = 112
- ◯ ACK = 116

Comment Box

Congrats for making it to the end of the exam! Leave any thoughts, comments, feedback, or doodles here.

Nothing in the comment box will affect your grade.

Ambiguities

If you feel like there was an ambiguity on the exam, you can put it in the box below.

For ambiguities, you must qualify your answer and provide an answer for both interpretations. For example, "if the question is asking about A, then my answer is X, but if the question is asking about B, then my answer is Y." You will only receive credit if it is a genuine ambiguity and both of your answers are correct. We will only look at this box if you request a regrade.