CS 168 Summer 2026

Introduction to the Internet Final Exam

PRINT Your Name: _____

PRINT Your Student ID: _____

You have 170 minutes. There are 8 questions of varying credit. (100 points total)

Question:	1	2	3	4	5	6	7	8	Total
Points:	12	21	14	12	11	10	10	10	100

For questions with **circular bubbles**, you may select only one choice.

- ○ Unselected option (Completely unfilled)
- ◉ Don't do this (it will be graded as incorrect)
- ● Only one selected option (completely filled)

For questions with **square checkboxes**, you may select one or more choices.

- ■ You can select
- ■ multiple squares
- ☑ Don't do this (it will be graded as incorrect)

Anything you write outside the answer boxes or you ~~cross out~~ will not be graded. If you write multiple answers, your answer is ambiguous, or the bubble/checkbox is not entirely filled in, we will grade the worst interpretation.

Honor Code: Read the honor code below and sign your name.

> I understand that I may not collaborate with anyone else on this exam, or cheat in any way. I am aware of the Berkeley Campus Code of Student Conduct and acknowledge that academic misconduct will be reported to the Center for Student Conduct and may further result in, at minimum, negative points on the exam.

SIGN your name: _____

Pre-Exam Activity: Oh no! All of our instructors have been grabbed by an octopus... but who's who?

_____

_____

_____

_____

_____

_____

_____

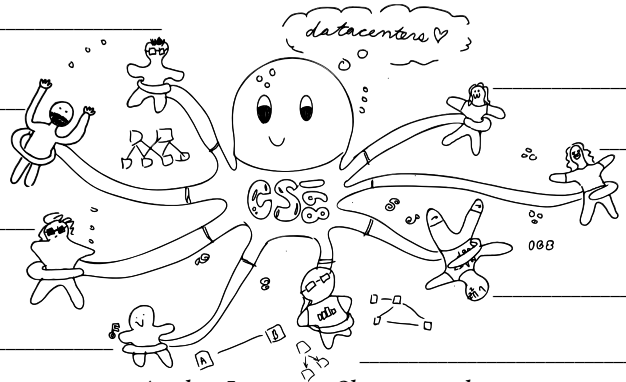

Art by: Lavanya Shyamsundar

Q1 *Projectpourri* **(12 points)**

For Q1.1–Q1.6, consider a working implementation of Project 3: Transport.

Q1.1 (2 points) When a data packet is first sent, what does the sender do? Select all that apply.

- ☐ Tag the packet with a timestamp.
- ☐ Add the packet to the retransmit queue.
- ☐ Add the packet to the receive queue.
- ☐ Send an ACK for the packet.
- ◯ None of the above

Q1.2 (2 points) Suppose the packet with the smallest sequence number in the receive queue has sequence number 120. If `self.rcv.nxt = 100`, what should the receiver do with this packet?

- ◯ Call `handle_accepted_seg` on the packet, and advance `self.rcv.nxt` past 100.
- ◯ Call `handle_accepted_seg` on the packet, but keep `self.rcv.nxt` at 100.
- ◯ Keep the packet in the receive queue, and set a pending ACK.
- ◯ Dequeue the packet from the receive queue, and wait for bytes 100–119 to arrive.

Q1.3 (2 points) The receiver starts by advertising a large receive window, then later advertises a smaller receive window. How should this change affect the sender?

- ◯ Reduce the amount of additional data allowed in flight.
- ◯ Retransmit enough unacknowledged data to match the new window.
- ◯ Decrease `self.snd.nxt` to fit the new window.
- ◯ Drop enough unsent data to fit the new window.

Q1.4 (2 points) A sender transmits three data packets: S1, S2, S3.

S2 and S3 arrive at the receiver, but S1 is lost. Later, the sender retransmits S1, and receives a cumulative ACK indicating that S1, S2, and S3 were received. What should the sender do?

- ◯ Retransmit S1, because S1 lacks an individual ACK.
- ◯ Remove S1, S2, and S3 from the retransmit queue.
- ◯ Retransmit S2 and S3.
- ◯ Keep S1, S2, and S3 in the retransmit queue until each of their retransmission timers expires.

Q1.5 (2 points) Suppose the receiver has already accepted bytes 100–109, and then receives a new packet whose payload is bytes 105–114. What should the receiver do?

- ◯ Keep the packet in the receive queue until the sender transmits 110–119.
- ◯ Call **`handle_accepted_seg`** on 100–114, and set **`self.rcv.nxt`** equal to 110.
- ◯ Remove 105–109 from the receive queue, and call **`handle_accepted_seg`** on 110–114.
- ◯ Replace 105–109 with the new packet's bytes, and call **`handle_accepted_seg`** on 110–114.

Q1.6 (2 points) A sender has data available in **`self.tx_data`**, but all bytes in the sender's currently advertised send window are in flight. What should **`maybe_send`** (from Stage 4) do?

- ◯ Send one packet if its payload length does not exceed the MSS.
- ◯ Retransmit the oldest packet to slide the window forward.
- ◯ Wait until ACKs or window updates slide the window forward.
- ◯ Increase the send window to fit the remaining data.

Q2 *DNS* **(21 points)**

Consider the DNS hierarchy below. Each box contains a zone, and the domain and IP of the authoritative name server for that zone. There are no other zones and name servers besides the ones shown.

Unless otherwise stated, assume no DNS or network errors occur.

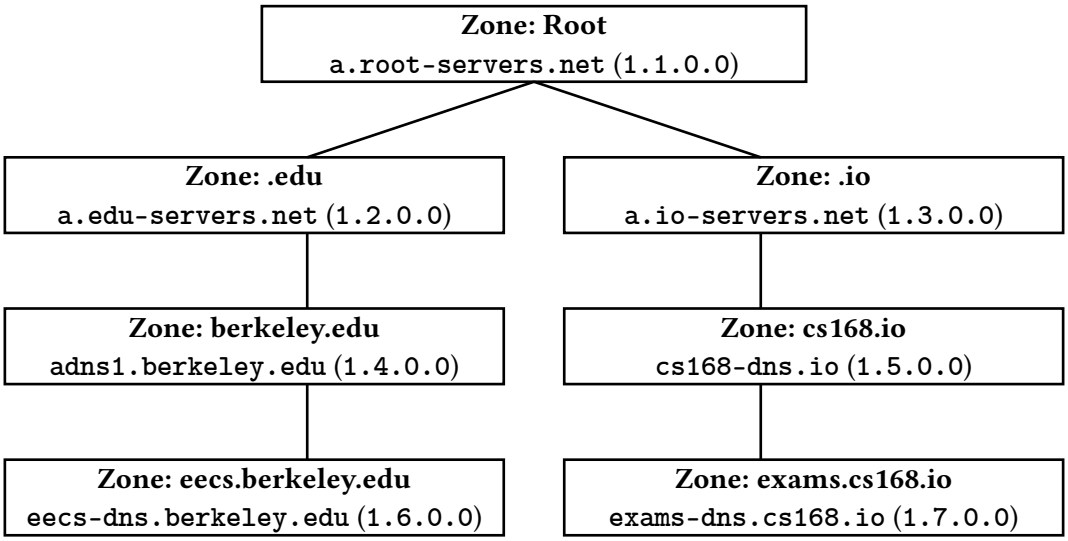

In the berkeley.edu zone, we add the record:

```
cs168.berkeley.edu CNAME octobot.cs168.io
```

In the eecs.berkeley.edu zone, we add the record:

```
hi.eecs.berkeley.edu   A   1.6.1.0
```

For Q2.1–Q2.4, a recursive resolver starts with an empty cache. A host Octobot uses a stub resolver to forward queries to a recursive resolver.

Q2.1 (2 points) Octobot looks up **`hi.eecs.berkeley.edu`**. How many queries does Octobot's stub resolver need to make to look up the IP address?

◯ 0 ◯ 1 ◯ 2 ◯ 3 ◯ 4 ◯ 5 ◯ 6 ◯ 7

Q2.2 (1 point) What record gets sent back to the stub resolver after looking up the IP address for **`hi.eecs.berkeley.edu`**?

◯ **`hi.eecs.berkeley.edu NS 1.6.1.0`**

◯ **`hi.eecs.berkeley.edu A 1.6.1.0`**

◯ **`hi.eecs.berkeley.edu CNAME 1.6.1.0`**

◯ **`hi.eecs.berkeley.edu MX 1.6.1.0`**

◯ None of the above

Q2.3 (2 points) The recursive resolver queries for the IP address of `cs168-dns.io`. How many DNS queries does the recursive resolver need to make to look up the IP address of `cs168-dns.io`?

◯ 0 ◯ 1 ◯ 2 ◯ 3 ◯ 4 ◯ 5 ◯ 6 ◯ 7

Q2.4 (2 points) Continuing from Q2.3 (i.e. caches not cleared), how many additional DNS queries does the recursive resolver need to make to look up the IP address of `cs168.berkeley.edu`?

◯ 0 ◯ 1 ◯ 2 ◯ 3 ◯ 4 ◯ 5 ◯ 6 ◯ 7

For Q2.5–Q2.8, Octobot is trying to look up the IP addresses of different sites. Assuming each record exists, which name server sends the given record to the recursive resolver?

Q2.5 (2 points) `.edu NS a.edu-servers.net`

◯ Root name server
◯ `.net` name server
◯ `.edu` name server

Q2.6 (1 point) `octobot.cs168.io A 1.5.28.5`

◯ `.io` name server
◯ `cs168.io` name server
◯ `berkeley.edu` name server

Q2.7 (1 point) `soda.berkeley.edu CNAME soda.io`

◯ Root name server
◯ `berkeley.edu` name server
◯ `.io` name server

Q2.8 (2 points) `eecs.berkeley.edu NS eecs-dns.berkeley.edu`

◯ Root name server
◯ `berkeley.edu` name server
◯ `.io` name server

Q2.9 (2 points) Suppose that `eecs-dns.berkeley.edu`'s IP address changes from `1.6.0.0` to `1.6.5.0`. `eecs-dns.berkeley.edu` remains authoritative for the eecs.berkeley.edu zone. What zone(s) need to update their record as a result?

◯ Only root name server
◯ Only `.edu` name server
◯ Only `berkeley.edu` name server
◯ Only `eecs.berkeley.edu` name server
◯ Both `.edu` and `berkeley.edu` name servers

Q2.10 (2 points) Octobot joins a different network and looks up `www.exams.cs168.io`.
How many queries does Octobot's recursive resolver need to make to look up the IP address for `www.exams.cs168.io`?

- ◯ 0
- ◯ 1
- ◯ 2
- ◯ 3
- ◯ 4
- ◯ Not enough information

Q2.11 (2 points) Suppose that the root server goes down, and the recursive resolver cannot reach the root server.

Which modification to this setup would best help eliminate this issue?

Reminder: In the current setup, we assume that `a.root-servers.net` is the only root name server.

- ◯ Use anycast with physical mirrors.
- ◯ Add more recursive resolvers.
- ◯ Decrease the TTL on the root zone's records.
- ◯ Switch the DNS from UDP to TCP.

Q2.12 (2 points) What happens if all servers switch from using IPv4 addresses to using IPv6 addresses?

- ◯ New **`AAAA`** type records are added, instead of **`A`** type records.
- ◯ The recursive resolver empties its cache.
- ◯ **`NS`** type records are updated with the new IPv6 addresses.
- ◯ A flag bit is set in the DNS UDP packet.

Q3 *STP* **(14 points)**

Consider running STP on the following topology:

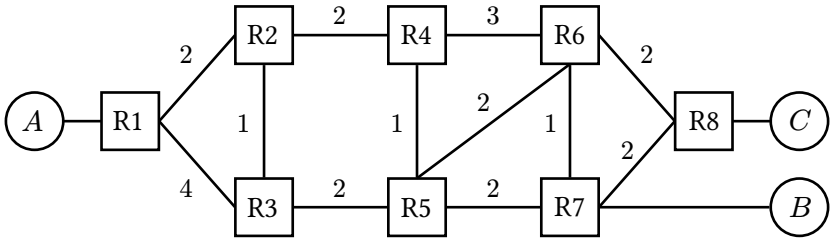

Switch IDs are ordered by their labels (R1 has the lowest ID, R2 has the next lowest ID, etc.).

Q3.1 (4 points) What is the state of the network after STP converges? Fill in the table below:

Switch	Total path cost to root	Switch at other end of root port
R5		
R6		
R7		
R8		

Q3.2 (3 points) Select all switch ports that are blocked after STP converges.
For example, "R3 to R1" means R3's port on the R3–R1 link.

☐ R1 to R2	☐ R3 to R1	☐ R4 to R6	☐ R6 to R4	☐ R7 to R6
☐ R1 to R3	☐ R3 to R2	☐ R5 to R3	☐ R6 to R5	☐ R7 to R8
☐ R2 to R1	☐ R3 to R5	☐ R5 to R4	☐ R6 to R7	☐ R8 to R6
☐ R2 to R3	☐ R4 to R2	☐ R5 to R6	☐ R6 to R8	☐ R8 to R7
☐ R2 to R4	☐ R4 to R5	☐ R5 to R7	☐ R7 to R5	○ None

Q3.3 (2 points) Fill in the blanks about the BPDU messages exchanged between routers:

Before receiving any BPDUs, R3 advertises: "The root is ____ (i) and I can reach it with cost ____ (ii).

After convergence, R3 advertises: "The root is ____ (iii) and I can reach it with cost ____ (iv)."

○ (i) R3	(ii) 1	(iii) R1	(iv) 3
○ (i) R1	(ii) 0	(iii) R1	(iv) 3
○ (i) R3	(ii) 0	(iii) R1	(iv) 3
○ (i) R3	(ii) 0	(iii) R2	(iv) 1

Q3.4 (2 points) Suppose R6 receives only these two BPDUs:

- From R5: "The root is R2, and I can reach it with cost 3."
- From R7: "The root is R5, and I can reach it with cost 2."

After processing both BPDUs, what is R6's STP state?

- ◯ Root R2 is 3 away.
- ◯ Root R5 is 2 away.
- ◯ Root R2 is 5 away.
- ◯ Root R5 is 3 away.

Regardless of your answers to the previous subparts, suppose STP has converged on the topology below:

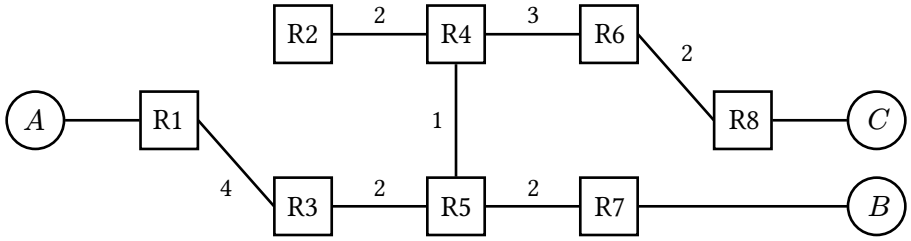

Assumptions:

- Switches R1 to R8 are all learning switches.
- All forwarding tables start out empty.

In each of the next subparts, select all of the switches that will receive the given packet.

Packets are sent one after the other, i.e. forwarding table entries in one subpart carry over to later subparts.

Q3.5 (1 point) B sends a packet to A.

☐ R1 ☐ R2 ☐ R3 ☐ R4 ☐ R5 ☐ R6 ☐ R7 ☐ R8

Q3.6 (1 point) A sends a packet to C.

☐ R1 ☐ R2 ☐ R3 ☐ R4 ☐ R5 ☐ R6 ☐ R7 ☐ R8

Q3.7 (1 point) C sends a packet to A.

☐ R1 ☐ R2 ☐ R3 ☐ R4 ☐ R5 ☐ R6 ☐ R7 ☐ R8

Q4 *End-to-End* **(12 points)**

Consider the network topology to the right.

Host A, Host B, and R2 are all on the same subnet and connected by a single shared medium.

Likewise, Host C, Host D, and R3 are all on a different subnet and connected by another shared medium.

There is a single DNS resolver in the network, labeled DNS. Assume everyone uses the same DNS resolver.

For Q4.1–Q4.5, each subpart continues from the previous one.

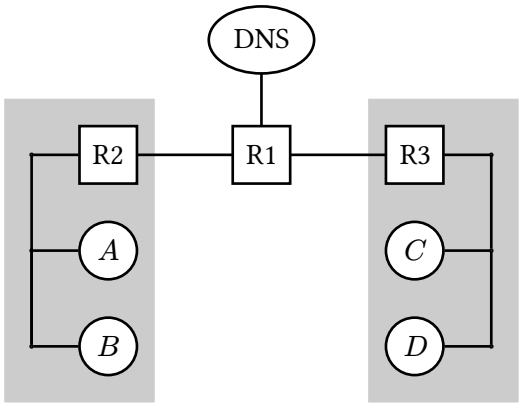

Q4.1 (2 points) Host C joins the network for the first time with an empty cache and broadcasts a DHCP discover request. R3 responds with a DHCP offer with some addresses, and Host C accepts the offer.

What addresses are contained in the payload of R3's DHCP offer? Select all that apply.

- ☐ R1's IP
- ☐ C's MAC
- ☐ C's IP
- ☐ R3's MAC
- ☐ DNS's MAC
- ☐ DNS's IP
- ☐ D's IP
- ☐ R3's IP

Q4.2 (2 points) Host C wants to communicate with Host B using the hostname `bee.cs168.org`.

What must Host C do first?

- ◯ Send a DNS query with the DNS resolver as the IP destination.
- ◯ Broadcast another DHCP discover request to receive a new IP address.
- ◯ Send a DNS query with R3 as the IP destination, so R3 can forward the query.
- ◯ Broadcast an ARP request to determine R3's MAC address.

Q4.3 (2 points) Later, Host C learns Host B's IP address. How can Host C determine whether Host B is in the same subnet as Host C?

- ◯ Check if the IP addresses of Host B and Host C are equal.
- ◯ Apply Host C's subnet mask to the IP addresses of Host B and Host C.
- ◯ Broadcast a DHCP discover request to learn Host B's MAC address.
- ◯ Apply R2's subnet mask to the IP addresses of Host B and R2.

The diagram, reprinted for your convenience:

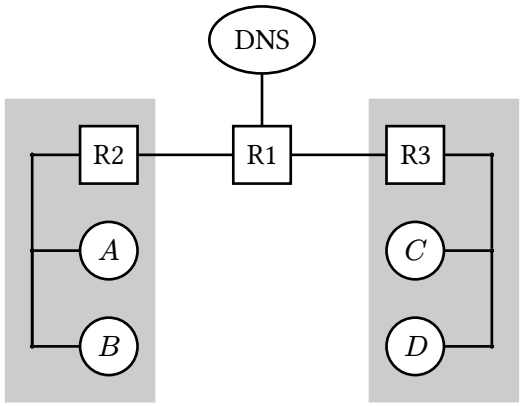

Q4.4 (2 points) Later, Host C sends its first IP packet to Host B. Host B receives this packet and inspects the packet header.

Fill in the below header fields for this packet. In each box, write one of: A, B, C, D, R1, R2, R3, DNS.

	Source	**Destination**
MAC Address		
IP Address		

Q4.5 (2 points) Later, Host C wants to send another IP packet to Host B. Assume none of Host C's cached entries have expired.

Which steps must Host C perform again before sending the packet? Select all that apply.

- ☐ Broadcast a DHCP discover request.
- ☐ Send a DNS query to the resolver.
- ☐ Broadcast an ARP request.
- ☐ Send an ICMP echo request.
- ○ None of the above

Q4.6 (2 points) Which of these are true about Network Address Translation (NAT)? Select all that apply.

- ☐ Preserves the end-to-end principle between hosts.
- ☐ Blocks unsolicited inbound traffic by default.
- ☐ Hides internal IP addresses from external servers.
- ☐ Encrypts packets between clients and servers.
- ○ None of the above

Q5 *Datacenters* **(11 points)**

In this question, consider the datacenter overlay/underlay protocol from lecture.

A tenant uses virtual network ID 42 and has two VMs:
- VM 1 has virtual IP `192.0.2.0` and physical IP `1.1.1.1`.
- VM 2 has virtual IP `192.0.2.1` and physical IP `2.2.2.2`.

VM 1 sends a packet to VM 2.

Q5.1 (2 points) While the packet is sent along the underlay, what is the outermost destination IP address on the packet?

◯ `1.1.1.1` ◯ `2.2.2.2` ◯ `192.0.2.0` ◯ `192.0.2.1`

Q5.2 (2 points) When the packet from VM 1 reaches VM 2, the outer IP header is removed. Which destination IP address does the resulting packet contain?

◯ `1.1.1.1` ◯ `2.2.2.2` ◯ `192.0.2.0` ◯ `192.0.2.1`

Q5.3 (2 points) Which of these are true? Select all that apply.

☐ VM 1 must know that VM 2 is hosted at physical address `2.2.2.2`.

☐ VM 2 must know that VM 1 is hosted at physical address `1.1.1.1`.

☐ Another tenant could reuse virtual IP `192.0.2.1` with a different virtual network ID.

☐ VM 2's virtual switch replaces a virtual IP address with a physical IP address.

◯ None of the above

Q5.4 (2 points) VM 2 moves from physical address `2.2.2.2` to `4.4.4.4`. VM 2's virtual IP and virtual network ID do not change. The underlay already knows how to route to `4.4.4.4`.

Which of these are true after the move? Select all that apply.

☐ VM 2 must receive a new virtual IP address.

☐ VM 2 must receive a new virtual network ID.

☐ The underlay does not need to learn the virtual-to-physical address mapping.

☐ Packets sent to VM 2's old physical address are redirected to `4.4.4.4` by the underlay.

◯ None of the above

The following subpart is independent from the previous subparts.

Each host-to-leaf link is 20 Gbps, and each leaf-to-spine link is 10 Gbps.

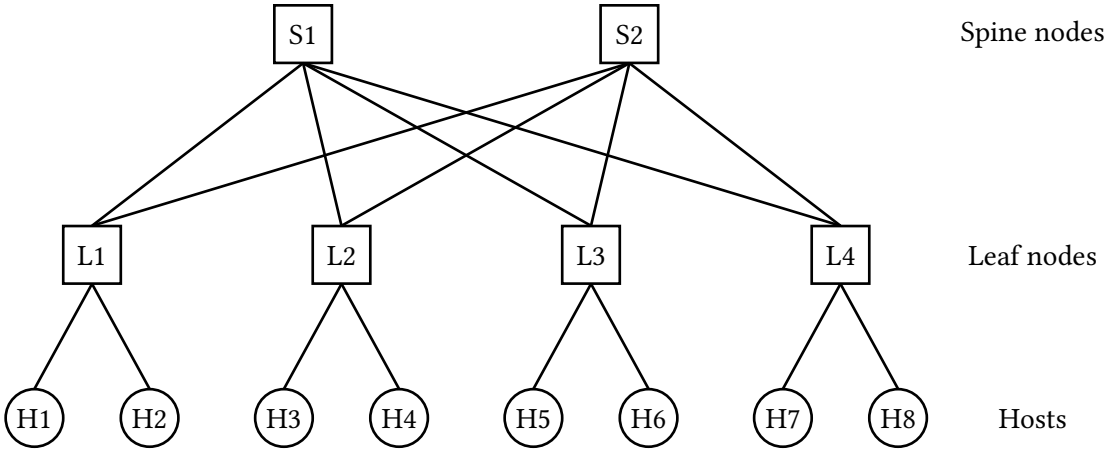

Q5.5 (3 points) For the partition separating H1–H4 from H5–H8, fill in the following:

Bisection bandwidth:	Gbps
Full bisection bandwidth:	Gbps
Oversubscription ratio:	

Q6 *Multicast* **(10 points)**

Q6.1 (2 points) Why is DVMRP not scalable?

- ◯ Routers store the entire network topology in memory.
- ◯ Routers can never rejoin a tree once they have left.
- ◯ Router forwarding tables require one entry per source, per destination group.
- ◯ DVMRP is an extension of a unicast protocol.

Q6.2 (2 points) In CBT, how does a host that is **not** a member of a group send a packet to the group?

- ◯ The host broadcasts the packet.
- ◯ The host unicasts an encapsulated packet directly to the core router.
- ◯ The host must first join the group before the host is allowed to transmit data.
- ◯ The host sends a special JOIN-ACK message to the nearest leaf router on the tree.

Consider running CBT on the topology below. Each host belongs to group G1, group G2, or both.

R3 is the designated core for G1, and R4 is the designated core for G2.

Q6.3 (2 points) Select all links that are part of the tree for group G1.

- ☐ R1–R2
- ☐ R1–R3
- ☐ R2–R4
- ☐ R3–R4
- ☐ R3–R5
- ☐ R3–R6
- ☐ R4–R6
- ☐ R5–R6

Q6.4 (2 points) Select all links that are part of the tree for group G2.

- ☐ R1–R2
- ☐ R1–R3
- ☐ R2–R4
- ☐ R3–R4
- ☐ R3–R5
- ☐ R3–R6
- ☐ R4–R6
- ☐ R5–R6

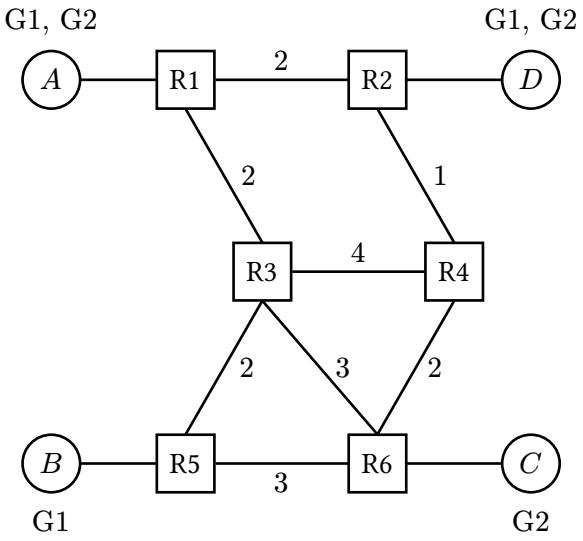

Q6.5 (2 points) How many distinct CBT Join messages are sent across the network to build these two trees?

Do not count host-to-router messages, and do not count intermediate routers forwarding a Join message. Assume no network errors occur.

◯ 4 ◯ 5 ◯ 6 ◯ 7 ◯ 8 ◯ Not enough information

Q7 *Collectives* **(10 points)**

Consider a collective operation with N nodes, each with an N-element vector.
We run a Scatter operation, followed by an AllGather operation. An example with $N = 4$ is shown below:

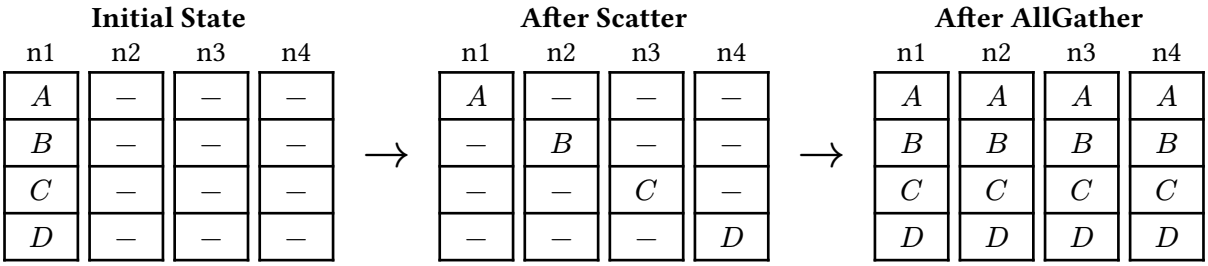

Q7.1 (2 points) True or false: Scatter and AllGather run computations on data while sending data across the network.

◯ True ◯ False

For Q7.2–Q7.3, suppose we connect the N nodes in a full mesh (all-to-all) overlay topology.

Q7.2 (2 points) What is the minimum number of vector elements that **Node 1** needs to send through the network, across both steps combined?

◯ 1 ◯ $N-1$ ◯ $2(N-1)$ ◯ $N(N-1)$ ◯ N^2

Q7.3 (2 points) What is the minimum number of vector elements that **Node 2** needs to send through the network, across both steps combined?

◯ 1 ◯ $N-1$ ◯ $2(N-1)$ ◯ $N(N-1)$ ◯ N^2

For Q7.4–Q7.5, suppose we connect the N nodes in a ring overlay topology. Then, we implement the AllGather operation in a similar way as the optimized AllReduce implementation from lecture:

- At the start, every node sends its element toward the left simultaneously.
- At each step, if a node receives a new element, the node sends that element to its left.
- The operation concludes when each node has the full vector.

Q7.4 (2 points) How many total vector elements are sent through the network in this AllGather implementation?

◯ 1 ◯ $N-1$ ◯ $2(N-1)$ ◯ $N(N-1)$ ◯ N^2

Q7.5 (2 points) True or false: For this AllGather implementation to work, the latencies between neighboring nodes must all be identical.

◯ True ◯ False

Q8 *Wireless and Cellular Potpourri* **(10 points)**

Q8.1 (2 points) According to MACA (not MACAW), in which of these scenarios are you allowed to immediately send an RTS, without waiting for another transmission to finish? Select all that apply.

- ☐ You hear an RTS at $t = 1$ and want to send an RTS at $t = 2$.
- ☐ You hear an RTS at $t = 1$, hear nothing at $t = 2$, and want to send an RTS at $t = 3$.
- ☐ You hear an RTS at $t = 1$, hear a CTS at $t = 2$, and want to send an RTS at $t = 3$.
- ☐ You hear nothing at $t = 1$, hear a CTS at $t = 2$, and want to send an RTS at $t = 3$.
- ◯ None of the above

Q8.2 (2 points) In the free-space model for wireless connections (i.e. inverse-square law), if the receiver moves closer to the sender, the signal strength will ____ increase.

◯ Always ◯ Sometimes ◯ Never

Q8.3 (2 points) In the path-loss model for wireless connections (i.e. accounting for obstacles and signal collisions), if the receiver moves closer to the sender, the signal strength will ____ increase.

◯ Always ◯ Sometimes ◯ Never

Q8.4 (1 point) True or false: If a single tunnel is configured between a user and the Internet, then a router that is part of that tunnel will see all packets being sent to/from this user.

◯ True ◯ False

Q8.5 (1 point) True or false: Routers in a cellular network must run a routing protocol (e.g. distance-vector) to find shortest paths through the network.

◯ True ◯ False

Q8.6 (1 point) True or false: Routers in a cellular network must communicate with neighboring routers at specific frequencies and times allocated for that router.

◯ True ◯ False

Q8.7 (1 point) True or false: Routers in a cellular network could look at the destination IP header field to deduce whether two packets are being sent to the same cellular device.

◯ True ◯ False

Comment Box

Congrats for making it to the end of the exam! Leave any thoughts, comments, feedback, or doodles here.

Nothing in the comment box will affect your grade.

Ambiguities

If you feel like there was an ambiguity on the exam, you can put it in the box below.

For ambiguities, you must qualify your answer and provide an answer for both interpretations. For example, "if the question is asking about A, then my answer is X, but if the question is asking about B, then my answer is Y." You will only receive credit if it is a genuine ambiguity and both of your answers are correct. We will only look at this box if you request a regrade.