CS 168 Summer 2026

Introduction to the Internet Midterm

PRINT Your Name: _____

PRINT Your Student ID: _____

You have 110 minutes. There are 7 questions of varying credit. (100 points total)

Question:	1	2	3	4	5	6	7	Total
Points:	19	14	14	11	12	15	15	100

For questions with **circular bubbles**, you may select only one choice.

- ○ Unselected option (Completely unfilled)
- ◎ Don't do this (it will be graded as incorrect)
- ● Only one selected option (completely filled)

For questions with **square checkboxes**, you may select one or more choices.

- ■ You can select
- ■ multiple squares
- ☑ Don't do this (it will be graded as incorrect)

Anything you write outside the answer boxes or you ~~cross out~~ will not be graded. If you write multiple answers, your answer is ambiguous, or the bubble/checkbox is not entirely filled in, we will grade the worst interpretation.

Honor Code: Read the honor code below and sign your name.

I understand that I may not collaborate with anyone else on this exam, or cheat in any way. I am aware of the Berkeley Campus Code of Student Conduct and acknowledge that academic misconduct will be reported to the Center for Student Conduct and may further result in, at minimum, negative points on the exam.

SIGN your name: _____



This content is protected and may not be shared, uploaded, or distributed.

Q1 *Potpourri* **(19 points)**

Q1.1 (2 points) In Project 1: Traceroute, why did we set an unreachable port as the destination?

- ◯ To send packets directly to each router along the path.
- ◯ To parse through duplicate packets and trigger a `recv`.
- ◯ To trigger an ICMP Port Unreachable message from the final host.
- ◯ To make UDP provide reliable delivery for traceroute probes.

Q1.2 (1 point) In Project 1: Traceroute, when receiving a packet with a non-empty Options field, we ignore the entire packet.

◯ True ◯ False

Q1.3 (2 points) In Project 2: Routing, why do we use the `history` data structure? Select all that apply.

- ☐ Implementing poison reverse.
- ☐ Tracking which neighbors have received which advertisements.
- ☐ Implementing incremental updates.
- ☐ Determining which routes have expired.
- ◯ None of the above

Q1.4 (2 points) A 10 Mbps link uses circuit switching.

- Flow A reserves 6 Mbps but is currently sending at 1 Mbps.
- Flow B reserves 4 Mbps but is currently trying to send at 6 Mbps.

What is the best explanation of what happens?

- ◯ Flow B can automatically use Flow A's unused 5 Mbps as the link has enough total capacity.
- ◯ Flow B is limited by its reserved bandwidth and therefore cannot send at 6 Mbps.
- ◯ Flow A's reservation is automatically lowered to its current sending rate of 1 Mbps.
- ◯ The capacity of the link automatically increases to accommodate both flows.

Q1.5 (1 point) In a statistically multiplexed network, the sum of the peak rates of all flows is generally a better estimate of the required link capacity than the peak of the aggregate traffic.

◯ True ◯ False

Q1.6 (1 point) Routers that receive IP packets must inspect the protocol number to forward the packet to the next hop.

◯ True ◯ False

Q1.7 (1 point) A router running eBGP advertises routes to all routers within its network.

◯ True ◯ False

This content is protected and may not be shared, uploaded, or distributed.

Q1.8 (2 points) Which is **not** an advantage of link-state protocols, compared to distance-vector protocols?

- ◯ Routers know the full network topology, so they have more information when choosing paths.
- ◯ Link-state protocols tend to converge faster than distance-vector protocols.
- ◯ A router can detect if neighboring routers have a different view of the network topology.
- ◯ Routers can compute shortest paths without learning the full network topology.

Q1.9 (2 points) Recall the classful addressing scheme from lecture:

Class Name	Class A	Class B	Class C
Number of Network Bits	1	2	3

Which of the following are true about classful addressing? Select all that apply.

- ☐ The various classes are used to support different numbers of hosts in an organization.
- ☐ One Class B address space is large enough to support most organizations.
- ☐ Class A network addresses allow hosts to use more network bandwidth than Class C.
- ☐ Classful addressing is used for small organizations in the modern Internet.
- ◯ None of the above

Q1.10 (2 points) Which of the following statements about router hardware are true? Select all that apply.

- ☐ The data plane computes routes and installs forwarding table entries.
- ☐ The fabric allows packets to travel between linecards.
- ☐ The control plane is invoked every time a user packet arrives.
- ☐ Operators typically interact with routers through the management plane.
- ◯ None of the above

Q1.11 (1 point) For TCP timer implementations, every time the sender receives an ACK for a packet that has not yet been ACKed, it will recalculate ETO (expected timeout).

◯ True ◯ False

Q1.12 (2 points) Which of these best explains why TCP often sends a standalone ACK instead of waiting to piggyback the ACK with data?

- ◯ The operating system does not know when the application will generate data to send.
- ◯ Piggybacking is only permitted during the TCP three-way handshake.
- ◯ Piggybacking violates reliability, because ACKs must always be sent in separate packets.
- ◯ TCP does not support full-duplex communication, so ACKs and data cannot travel together.

This content is protected and may not be shared, uploaded, or distributed.

Q2 *Links* **(14 points)**

Consider the topology to the right, where each link is labeled with its bandwidth and propagation delay.

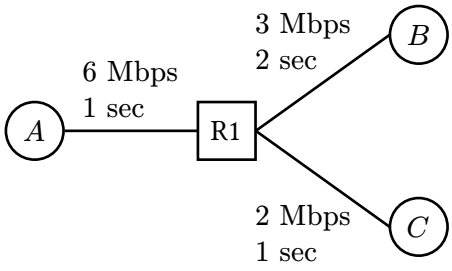

Assumptions:

- A router must receive all bits of a payload before sending that payload along the next link.
- Queue sizes are infinite, and queues are processed in FIFO order.
- A packet is considered to "arrive" at a router/host when the last byte of the packet is received by that router/host.

A sends an endless number of 6 Mbit packets to B, and an endless number of 12 Mbit packets to C.
A alternates sending packets to $B, C, B, C, \ldots$, with each packet transmitted one after the other.
R1 only forwards packets out of one link at a time.

Q2.1 (2 points) A sends the first packet to B at $t = 0$ sec. What time does the packet arrive at B?

◯ 3 ◯ 4 ◯ 5 ◯ 6 ◯ 7 ◯ 8 ◯ 9 ◯ 10

Q2.2 (2 points) What time does the first packet with destination C arrive at C?

◯ 6 ◯ 7 ◯ 8 ◯ 9 ◯ 10 ◯ 11 ◯ 12 ◯ 13

Q2.3 (2 points) Which of these best describes the pattern of packets arriving at B and C?

◯ One packet arrives at B, then one packet arrives at C, then this repeats.

◯ One packet arrives at B, then two packets arrive at C, then this repeats.

◯ Two packets arrive at B, then one packet arrives at C, then this repeats.

◯ Not enough information.

Q2.4 (2 points) After a long time, which of these best describes the pattern of the queue size at R1?

◯ It is always 0.

◯ It is always between 0 and some non-zero maximum value.

◯ It is always between some non-zero minimum value and some non-zero maximum value.

◯ It grows with no maximum value.

This content is protected and may not be shared, uploaded, or distributed.

Q2.5 (3 points) After a long time, let b be the total number of **bits** received by B, and let c be the total number of **bits** received by C.

Which of these best represents the approximate relationship between b and c?

◯ $b \approx 1.5c$ ◯ $b \approx 2c$ ◯ $b \approx 3c$ ◯ $b \approx 4c$ ◯ $b \approx c$

◯ $c \approx 1.5b$ ◯ $c \approx 2b$ ◯ $c \approx 3b$ ◯ $c \approx 4b$

◯ Not enough information

Q2.6 (3 points) After a long time, let b' be the amount of **time** that R1 spends forwarding packets to B, and let c' be the amount of **time** that R1 spends forwarding packets to C.

Which of these best represents the approximate relationship between b' and c'?

◯ $b' \approx 1.5c'$ ◯ $b' \approx 2c'$ ◯ $b' \approx 3c'$ ◯ $b' \approx 4c'$ ◯ $b' \approx c'$

◯ $c' \approx 1.5b'$ ◯ $c' \approx 2b'$ ◯ $c' \approx 3b'$ ◯ $c' \approx 4b'$

◯ Not enough information

This content is protected and may not be shared, uploaded, or distributed.

Q3 *Distance-Vector* **(14 points)**

Consider running the distance-vector algorithm from lecture on this topology. All unlabeled links cost 1.

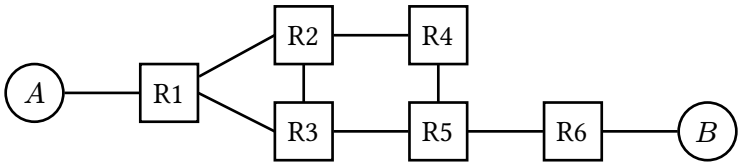

Assume the following unless otherwise stated:

- At $t = 0$, all forwarding tables are empty.
- At $t = 1$, static routes are installed.
- At every time step starting at $t = 2$, each router expires routes, then processes advertisements and updates its table, then sends out advertisements, which all happen instantly.
- All propagation delays are 2 seconds, i.e. an advertisement sent out at $t = 2$ can be processed at $t = 4$.
- Routes expire after 1 second of not hearing advertisements.
- Periodic advertisements are sent every 3 seconds.
- All costs 16 or greater are considered infinite.
- Split horizon, poison reverse, and route poisoning are disabled.

Q3.1 (2 points) What is the first time step where R4 adds A to its forwarding table?

○ 1 ○ 2 ○ 3 ○ 4 ○ 5 ○ 6 ○ 7 ○ None

Q3.2 (2 points) What is the first time step where all routers simultaneously have an entry for B?

○ 2 ○ 3 ○ 4 ○ 5 ○ 6 ○ 7 ○ 8 ○ None

Q3.3 (2 points) What is true about this network after a long time?

☐ The network reaches steady-state and all packets are routed through the least-cost path.

☐ All routers' routing tables will repeatedly lose and repopulate all entries in their tables.

☐ R1 and R6 will always have at least one entry in their routing table.

☐ Reducing all propagation delays to 1 second will help the scheme reach steady state.

○ None of the above

This content is protected and may not be shared, uploaded, or distributed.

Now consider rerunning the algorithm, starting over at $t = 0$ with empty forwarding tables.

We modify the following assumptions:
- All propagation delays are 1 second, i.e. an advertisement sent out at $t = 2$ can be processed at $t = 3$.
- Routes expire after 5 seconds of not hearing advertisements.

Q3.4 (2 points) What is the first time step that R3's routing table reaches steady-state?

$t =$

A long time after convergence, the link between A and R1 goes down. All routers expire their routes to A except R3.

In each of Q3.5–Q3.7, select the routers that will eventually have a cost-16 entry for A. Each subpart is independent.

Q3.5 (2 points) Assume split horizon and poison reverse are disabled.

☐ R1 ☐ R2 ☐ R3 ☐ R4 ☐ R5 ☐ R6 ○ None

Q3.6 (2 points) Assume only split horizon is enabled.

☐ R1 ☐ R2 ☐ R3 ☐ R4 ☐ R5 ☐ R6 ○ None

Q3.7 (2 points) Assume only poison reverse is enabled.

☐ R1 ☐ R2 ☐ R3 ☐ R4 ☐ R5 ☐ R6 ○ None

This content is protected and may not be shared, uploaded, or distributed.

Q4 *Link-State* **(11 points)**

Consider running the link-state algorithm from lecture on this topology. Each subpart is independent.

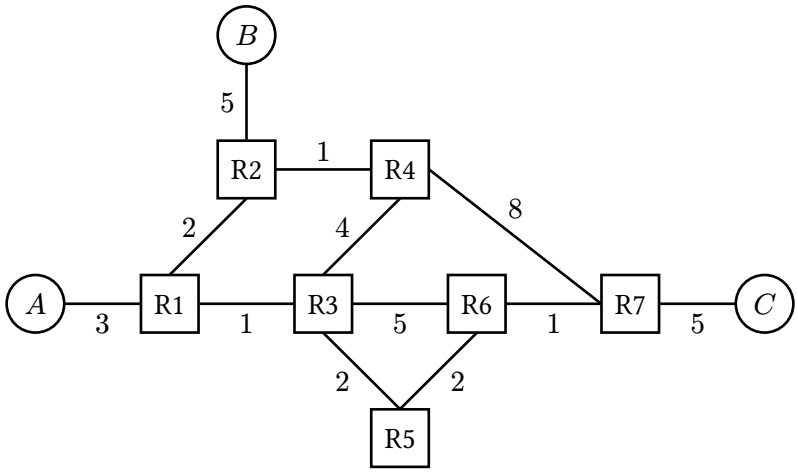

Q4.1 (2 points) Suppose that the link between R5 and R6 goes down. R5 and R6 have recomputed their routes, but they have **not** yet sent any updates.

What is the total cost of a packet's route from A to C? If the packet does not reach C, write "inf."

Q4.2 (2 points) Suppose that the link between R2 and R4 goes down. R2 and R4 have recomputed their routes, but they have **not** yet sent any updates.

What is the total cost of a packet's route from B to C? If the packet does not reach C, write "inf."

This content is protected and may not be shared, uploaded, or distributed.

For subparts Q4.3 to Q4.4, suppose that our routers failed to track sequence numbers or timestamps in link-state advertisements.

Q4.3 (2 points) In 10 words or fewer, explain why this causes problems.

Q4.4 (2 points) As a quick fix, you delete router R3 from the network.

True or False: This removes the need to track sequence numbers or timestamps.

◯ True ◯ False

Q4.5 (3 points) Suppose two routers know the whole topology. However, one router computes shortest paths using Dijkstra's (minimum total link cost), while the other router uses Breadth First Search (minimum number of hops, ignoring link costs).

In general (not necessarily for the provided topology), which of the following statements are true? Select all that apply.

☐ Packets may enter a forwarding loop.

☐ Packets may take non-shortest paths but still reach their destinations.

☐ Every packet is guaranteed to follow a globally shortest path.

☐ One router's shortest-path computations can affect another router's forwarding table.

◯ None of the above

This content is protected and may not be shared, uploaded, or distributed.

Q5 *Addressing* **(12 points)**

Q5.1 (2 points) Given an IP address and a subnet mask, how would a host calculate its network prefix?

◯ Bitwise OR ◯ Bitwise AND ◯ Bitwise XOR ◯ None of these

Q5.2 (2 points) A network has address `10.50.0.0` with a subnet mask of `255.255.248.0`. What is the CIDR (slash) notation for this network?

Hint: 248 in binary is `11111000`.

◯ `10.50.0.0/20` ◯ `10.50.0.0/22`

◯ `10.50.0.0/21` ◯ `10.50.0.0/24`

Q5.3 (2 points) A provider allocates the block `172.20.0.0/19` for a new office. What is the total number of usable host IP addresses available within this network block?

◯ 2^{11} ◯ 2^{12} ◯ 2^{13} ◯ 2^{14}

A router has the forwarding table below, and represents it as a trie to make forwarding decisions:

CIDR Notation	Fixed Bits of Prefix	Output Port
`10.1.0.0/16`	`00001010 00000001`	Port 1
`10.1.64.0/18`	`00001010 00000001 01`	Port 2
`10.1.80.0/20`	`00001010 00000001 0101`	Port 3
`10.1.82.0/23`	`00001010 00000001 0101001`	Port 4
`0.0.0.0/0`	None	Port 5

Q5.4 (2 points) A packet arrives with the destination IP `10.1.82.1`. Which output port will the router forward the packet to?

◯ Port 1 ◯ Port 2 ◯ Port 3 ◯ Port 4 ◯ Port 5

Q5.5 (2 points) A packet arrives with the destination IP `10.1.95.1`. How many bits of the destination address does the router check before determining that the address maps to Port 3?

Hint: `10.1.95.1` in binary is `00001010 00000001 01011111 00000001`.

◯ 19 bits ◯ 20 bits ◯ 21 bits ◯ 22 bits ◯ 23 bits ◯ 24 bits

Q5.6 (2 points) A packet arrives with the destination IP `10.1.81.1`. How many bits of the destination address does the router check before determining that the address maps to Port 3?

Hint: `10.1.81.1` in binary is `00001010 00000001 01010001 00000001`.

◯ 19 bits ◯ 20 bits ◯ 21 bits ◯ 22 bits ◯ 23 bits ◯ 24 bits

This content is protected and may not be shared, uploaded, or distributed.

This page left intentionally (mostly) blank

The exam continues on the next page.

This content is protected and may not be shared, uploaded, or distributed.

Q6 *BGP* **(15 points)**

Consider the AS graph below, where all ASes follow Gao-Rexford import and export policies.

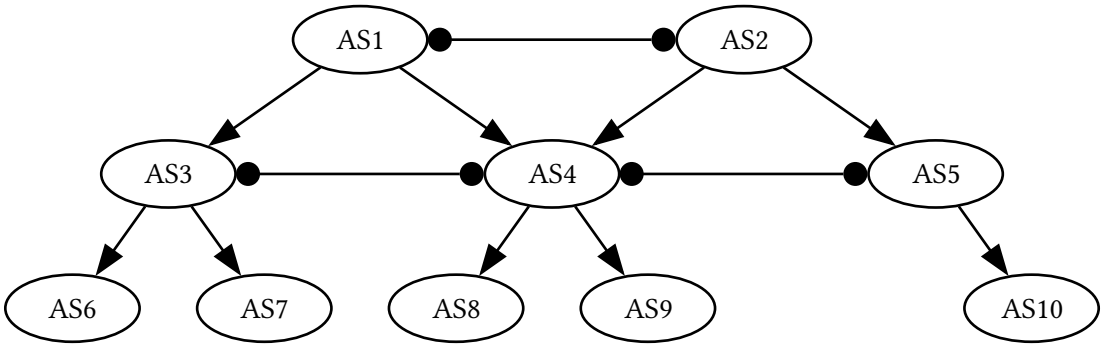

Q6.1 (2 points) AS9 sends a packet to AS7. Which of these paths does the packet take?

- ◯ AS9 → AS4 → AS1 → AS3 → AS7
- ◯ AS9 → AS4 → AS3 → AS7
- ◯ AS9 → AS4 → AS5 → AS2 → AS1 → AS3 → AS7
- ◯ AS9 → AS4 → AS2 → AS1 → AS3 → AS7
- ◯ The packet cannot reach AS7.

Q6.2 (2 points) AS4 receives a route advertisement from its peer AS5. Which neighbors will AS4 forward that advertisement to?

- ◯ AS1 and AS2
- ◯ AS1, AS2, AS8, and AS9
- ◯ AS1, AS2, AS3, AS8, and AS9
- ◯ AS8 and AS9
- ◯ No neighbors

Q6.3 (3 points) For this subpart only, suppose the peer link between AS1 and AS2 fails.

Which of these ASes are no longer able to exchange traffic? Select all that apply.

- ☐ AS1 and AS2
- ☐ AS1 and AS10
- ☐ AS7 and AS1
- ☐ AS2 and AS4
- ☐ AS2 and AS3
- ◯ None of the above

Q6.4 (2 points) A router in AS2 hears about the two advertisements below. Which route does AS2 prefer?

Advertisement I: A router in AS1 sends: "Destination AS7 with ASPATH [AS1, AS3, AS7]."

Advertisement II: A router in AS4 sends: "Destination AS7 with ASPATH [AS4, AS3, AS7]."

- ◯ Advertisement I
- ◯ Advertisement II
- ◯ Both are equally preferred.
- ◯ Not enough information.

This content is protected and may not be shared, uploaded, or distributed.

Q6.5 (2 points) For this subpart only, suppose the peer link between AS4 and AS5 fails.

A router in AS4 hears about the two advertisements below. Which route does AS4 prefer?

Advertisement I:
A router in AS2 sends: "Destination AS10 with ASPATH [AS2, AS5, AS10], and MED 10."

Advertisement II:
A different router in AS2 sends: "Destination AS10 with ASPATH [AS2, AS5, AS10], and MED 1."

- ◯ Advertisement I
- ◯ Advertisement II
- ◯ Both are equally preferred.
- ◯ Not enough information.

Q6.6 (2 points) Which statement best explains why the route selected by BGP is not necessarily the shortest AS path in the graph?

- ◯ BGP ignores AS path length whenever Gao-Rexford rules are used.
- ◯ Some shorter paths may never be advertised because export policy removes them before route selection happens.
- ◯ MED values are always compared before AS path length, so a longer path with lower MED may be imported.
- ◯ AS path length is only used to prevent loops, not to import routes.

Q6.7 (2 points) Suppose AS4 learns a route from its peer AS3 and then accidentally advertises that route to AS2, even though this violates Gao-Rexford export policy. What happens?

- ◯ AS2 may accept the route, because AS2 does not care that AS4 violated its export policy.
- ◯ AS2 rejects the route, because AS4 would not make money from carrying AS2′s traffic.
- ◯ AS2 rejects the route, because the advertisement comes from AS2′s customer.
- ◯ AS2 accepts the route only if the destination is AS4′s customer.

This content is protected and may not be shared, uploaded, or distributed.

Q7 *Transport* **(15 points)**

Host A is sending data to Host B using TCP, as described in lecture.

Assume the following, unless otherwise stated:
- Congestion control is not in use.
- All TCP sequence numbers, ACK numbers, and window sizes are measured in bytes.
- Each data segment holds 4 bytes.

Q7.1 (2 points) A's initial sequence number is #700, and B's initial sequence number is #900.

What is the sequence number of the first data byte that A sends to B?

◯ #700 ◯ #702 ◯ #900 ◯ #902

◯ #701 ◯ #703 ◯ #901 ◯ #903

Q7.2 (5 points) Before receiving any segments, B's advertised window is 16 bytes.

B receives segments S1, S3, S2 (in that order), and immediately sends an ACK for each segment. Fill in the table below.

Hint: B buffers out-of-order packets that cannot be delivered to the application.

Segment received	**ACK number sent by B**	**Segment(s) B can deliver to the application**	**B's advertised window after processing segment(s)**
#701–#704 (S1)	◯ #701 ◯ #704 ◯ #705	☐ S1 ☐ S2 ☐ None	◯ 8 ◯ 12 ◯ 16
#709–#712 (S3)	◯ #705 ◯ #709 ◯ #712	☐ S2 ☐ S3 ☐ None	◯ 8 ◯ 12 ◯ 16
#705–#708 (S2)	◯ #708 ◯ #712 ◯ #713	☐ S2 ☐ S3 ☐ None	◯ 8 ◯ 12 ◯ 16

This content is protected and may not be shared, uploaded, or distributed.

For Q7.3 to Q7.6, congestion control is in use, as described in lecture.

Assumptions for Q7.3 to Q7.6:
- CWND and SSTHRESH are measured in segments, where each data segment holds 4 bytes.
- A's usable send window is $\min(\text{RWND}, \text{CWND})$, and A always has more data to send.

Q7.3 (2 points) Suppose A receives ACK #713. This ACK advertises $\text{RWND} = 2$ segments.

Right before receiving this ACK, $\text{CWND} = 5$ segments, and A is in Slow Start.

After processing ACK #713, which bytes is A allowed to send?

- ◯ #713 through #716
- ◯ #717 through #720
- ◯ #713 through #720
- ◯ #721 through #724

Q7.4 (2 points) Suppose instead that ACK #713 advertises a very large RWND.

Right before receiving this ACK, CWND = 4 segments, SSTHRESH = 4 segments, and A is in Slow Start.

After processing ACK #713, what mode is A in?

- ◯ Slow Start
- ◯ Fast Recovery
- ◯ Congestion Avoidance

Q7.5 (2 points) Some time later, A is in Congestion Avoidance with these parameters:
- $\text{CWND} = 4$ segments, $\text{SSTHRESH} = 8$ segments.
- Bytes #713-#728 have been sent but not yet ACKed.
- Bytes #713-#716 are lost.
- Bytes #717-#728 arrive at B.

After A receives 3 duplicate ACKs for ACK #713, what are the new values of SSTHRESH and CWND?

- ◯ $\text{SSTHRESH} = 1$ segment, $\text{CWND} = 5$ segments
- ◯ $\text{SSTHRESH} = 2$ segments, $\text{CWND} = 2$ segments
- ◯ SSTHRESH = 2 segments, $\text{CWND} = 5$ segments
- ◯ $\text{SSTHRESH} = 8$ segments, $\text{CWND} = 4$ segments

Q7.6 (2 points) Continuing from Q7.5, A retransmits bytes #713-#716. Then, A receives ACK #729. What happens next?

- ◯ A stays in Fast Recovery and CWND stays 5 segments.
- ◯ A enters Congestion Avoidance and CWND becomes 5 segments.
- ◯ A enters Congestion Avoidance and CWND becomes 2 segments.
- ◯ A enters Slow Start and CWND becomes 1 segment.

This content is protected and may not be shared, uploaded, or distributed.

Comment Box

Congrats for making it to the end of the exam! Leave any thoughts, comments, feedback, or doodles here.

Nothing in the comment box will affect your grade.

Ambiguities

If you feel like there was an ambiguity on the exam, you can put it in the box below.

For ambiguities, you must qualify your answer and provide an answer for both interpretations. For example, "if the question is asking about A, then my answer is X, but if the question is asking about B, then my answer is Y." You will only receive credit if it is a genuine ambiguity and both of your answers are correct. We will only look at this box if you request a regrade.

This content is protected and may not be shared, uploaded, or distributed.